Spare Parts SATAjet® 100 B

Art. No./Descr.
1826 4 pieces non-drip devices for 0.6 l PVC cup
3988 10 paint strainers for SATA spray guns, except SATAminijet
6395 Pack of 4 CCS clips available in colours green, blue, red and black
15438 Paint needle packing
25874 O-Ring 9 x 1.5 mm Perbunan
27243 QCC quick replacement cup (PVC) 0.6 l
49395 Screw-on lid for 0.6 l PVC cup with drip-catching ring and non-drip device
76018 10 packs of 10 paint strainers
76026 50 packs of 10 paint strainers
78154 End cap SATAjet for guns without micrometer
89771 Spindle, cpl., for round / flat spray control
91959 Air piston rod
130492 Trigger kit packed in PVC bag
133926 Trigger sleeve kit
133934 Pack of 3 packings
133942 Seal retainer
133959 Set of springs with each 3 pieces paint needles/air piston springs
133967 Pack of 3 adjustment screws
133983 Air connection piece G1/4a
133991 Pack of 3 air piston heads
139188 Material flow control with counter nut
139964 Air micrometer for
140574 Control knob and screw (each 1)
140582 Pack of 5 sealing elements
143230 Pack of 3 air distribution rings

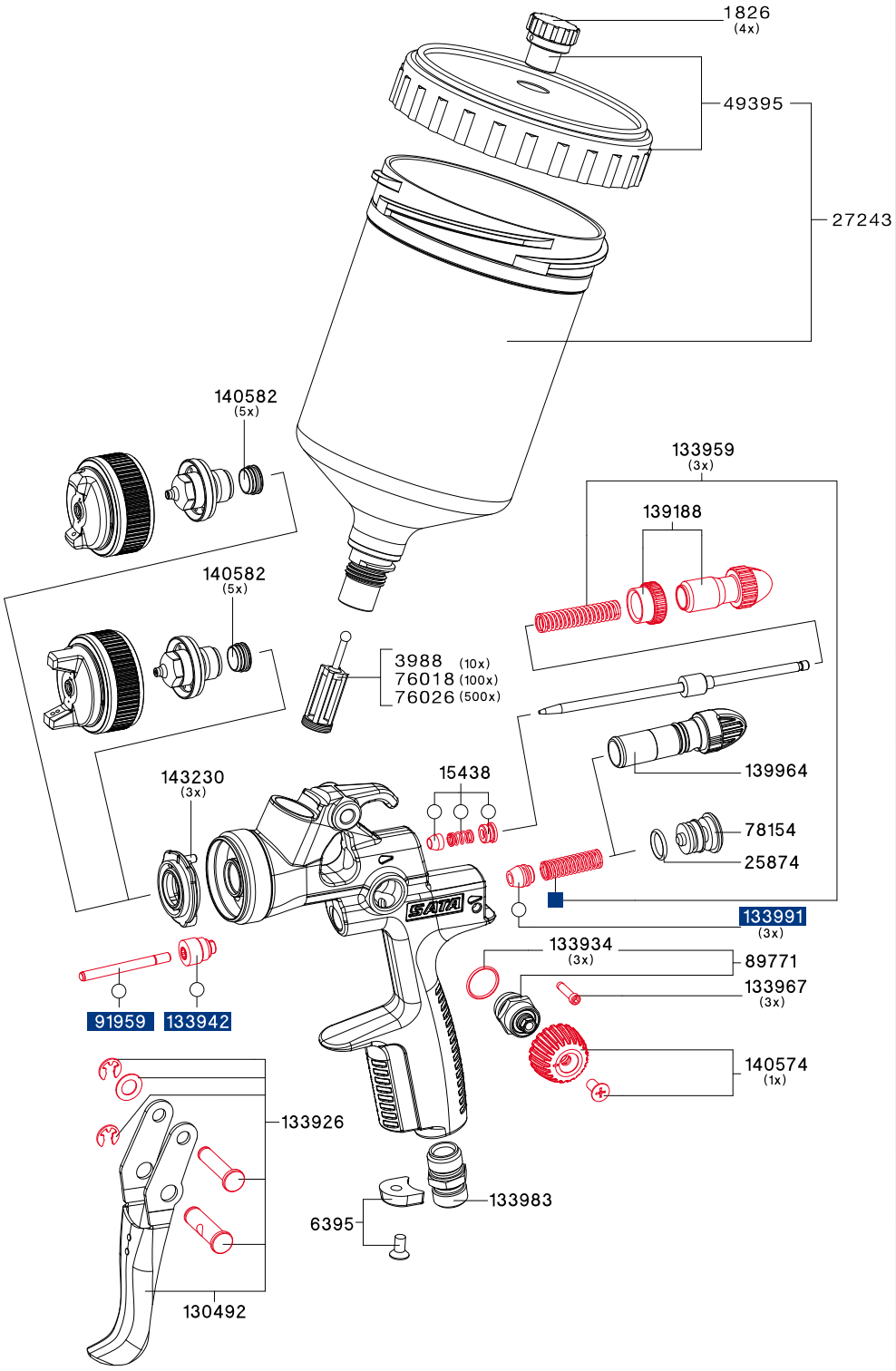

Art. No./Descr.	
9050 **Tool kit** · Extraction tool · Paint strainer · Cleaning brush · Paint strainer · Allen wrench 2 mm width · Allen wrench 4 mm width · Universal spanner	

Art. No./Descr.
130542 **Repair Kit**
92759 **Air piston service unit**
○ **183780** **Sealing kit**

All prices are recommended list prices. Errors, technical modifications and printing erros reserved.